RADIUS	R TOL	POWER	IRRG	CA
-38.63 CC	-	3	0.5	90%
Plano	-	3	0.5	90%

DIA	DIA TOL	MATERIAL	INDEX	CT	CT TOL
25.00	+0/-0.1	H-K9L	517642	3.50	±0.10

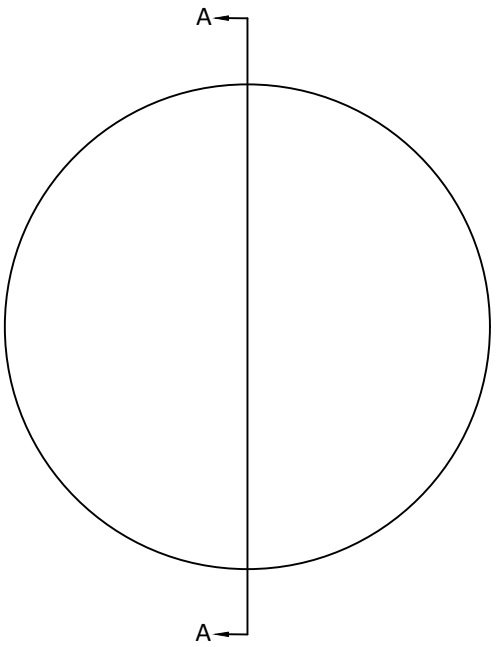

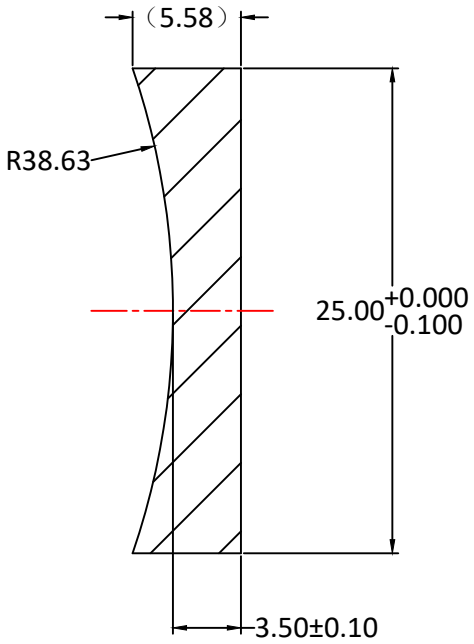

SECTION A-A

Notes:

1. ALL DIMENSIONS IN MM
2. TOLERANCE UNLESS SPECIFIED ± 0.10
3. MATERIAL: OPTICAL GLASS H-K9L
4. MANUFACTURE PER MIL-PRF-13830
5. POLISH TO TESTPLATE WITHIN POWER AND IRREGULARITY INDICATED (FRINGES)
6. FOCAL LENGTH(EFL): -75mm±1%
7. SURFACE QUALITY : 40-20 SCRATCH-DIG
8. CHAMFER EDGES: 0.5mm×45°MAX UNLESS SPECIFIED
9. CENTRATION TOLERANCE: ＜3arcmin
10. COATING: UNCOATED

		NAME	DATE
UNLESS OTHERWISE SPECIFIED:	DRAWN	Sally Song	11.18.24
DIMENSIONS ARE IN mm TOLERANCES: FRACTIONAL ± ANGULAR: ±3 ARC MIN TWO PLACE DECIMAL: ±0.10 THREE PLACE DECIMAL: ±0.05	CHECK		
	ENG APPR.		
	MFG APPR.		
INTERPRET GEOMETRIC TOLERANCING PER:	QA		
MATERIAL H-K9L	COMMENTS		
FINISH			

CLZ OPTICAL MANUFACTURER FROM CHINA

TITLE:

DIAMETER 25.00mm, EFL -75mm, HK9L PLANO CONCAVE LENSES

SIZE	DWG.NO.	REV
A	L-PC02521	0

DO NOT SCALE DRAWING	PROJECT NO.	SCALE:	WEIGHT:	SHEET 1 OF 1