RADIUS	R TOL	POWER	IRRG	CA
5.00	±0.05	-	-	-
Plano	-	-	-	-

DIA	DIA TOL	MATERIAL	INDEX	CT	CT TOL
10.00	+0/-0.20	Silicon		6.27	±0.05

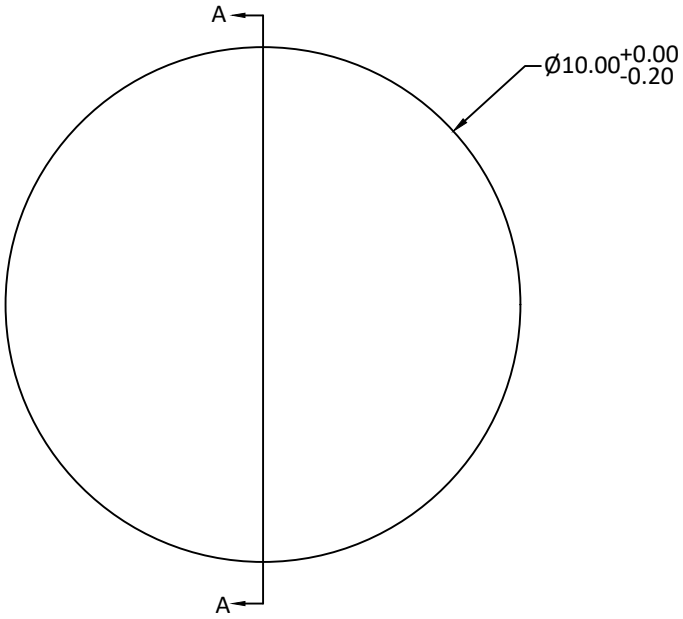

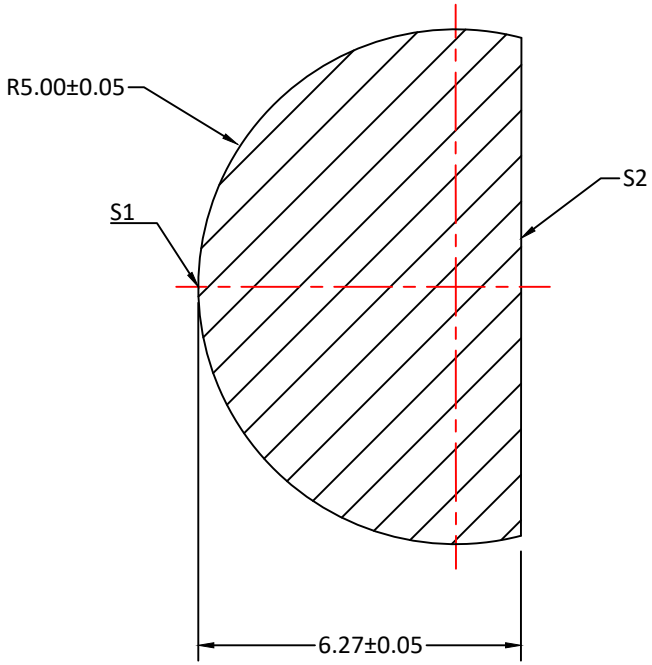

SECTION A-A

Notes:

1. ALL DIMENSIONS IN MM
2. MATERIAL: HRFZ-SILICON, RESISTANCE > 10kΩ*cm
3. S1: HYPER-HEMISPHERICAL, POLISHED
4. S2: FLAT, POLISHED
5. CLEAR APERTURE: ≥90% OF DIAMETER
6. SURFACE QUALITY: 60-40 SCRATCH-DIG
7. THICKNESS TOLERANCE: 0.05mm
8. SURFACE ACCURACY: ±0.01mm DEVIATION FROM IDEAL SPHERE AND PLANE

UNLESS OTHERWISE SPECIFIED:

DIMENSIONS ARE IN mm
TOLERANCES:
FRACTIONAL ±
ANGULAR: ±3 ARC MIN
TWO PLACE DECIMAL: ±0.10
THREE PLACE DECIMAL: ±0.05

INTERPRET GEOMETRIC TOLERANCING PER:

MATERIAL
SILICON

FINISH

DO NOT SCALE DRAWING

	NAME	DATE
DRAWN	Ann Chen	08.08.25
CHECK		
ENG APPR.		
MFG APPR.		
QA		

COMMENTS

PROJECT NO.

CLZ OPTICAL
MANUFACTURER FROM CHINA

TITLE:

10.00 DIAMETER, 6.27 THICKNESS TERAHERTZ SILICON HYPER BALL LENS

SIZE A | DWG.NO. CLZ-Hyper-10-627 | REV 0

SCALE: | WEIGHT: | SHEET 1 OF 1